LAYING LENGTH

MULTI FITTINGS

ISSUE DATE: NOV 15/17
SUPERCEDES: MAY 10/05

CLEANOUT TEE (HxHxFPT)

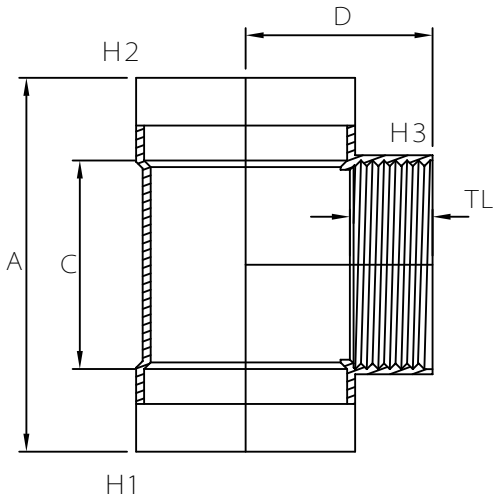

INJECTION MOLDED FITTING (M)

	SIZE H1xH2xH3	PART NUMBER	A REF	C REF	D REF	TL REF
M	4x4x4	040922	7.875	4.375	3.500	1.250